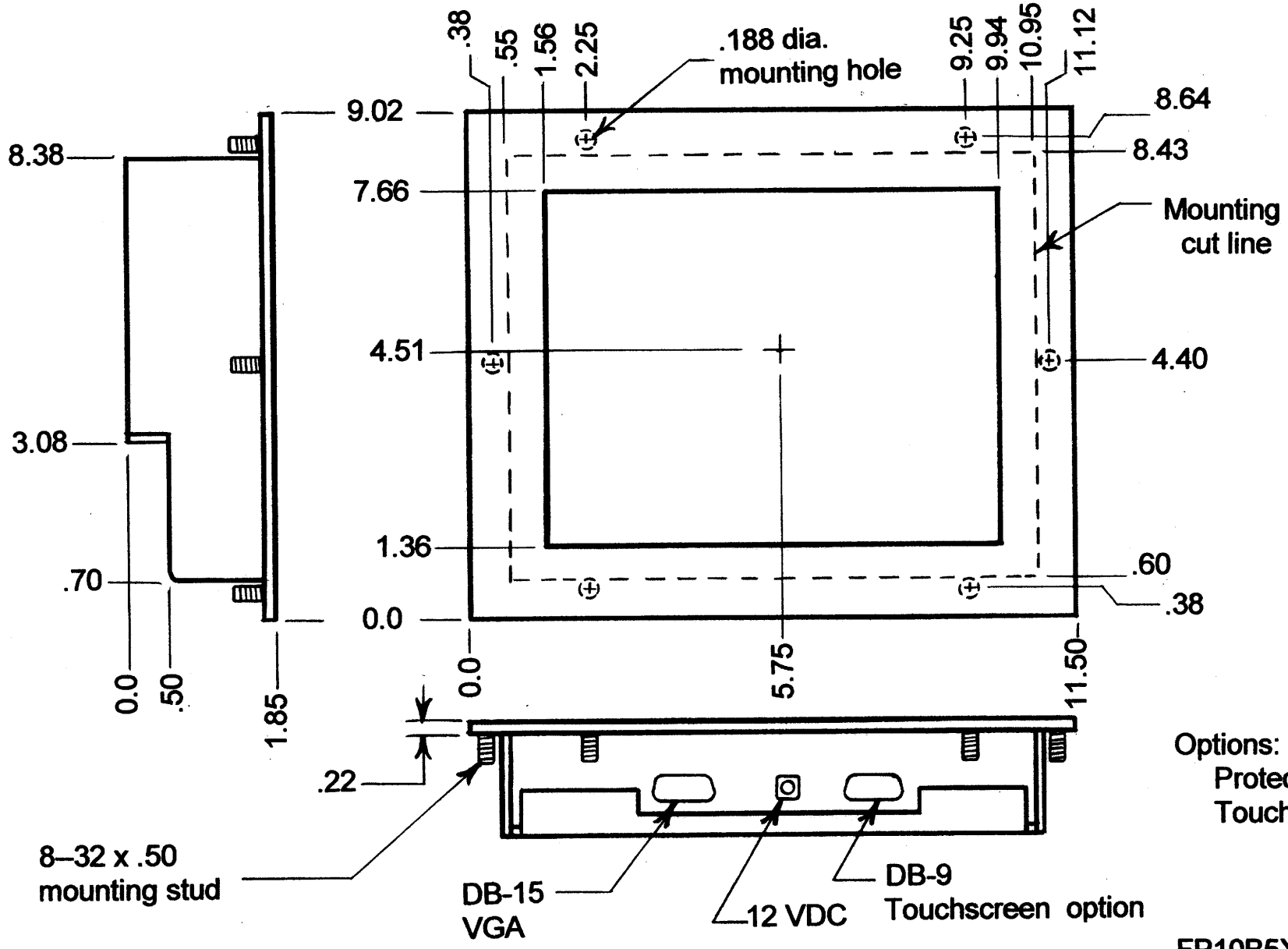

Options:
Protective panel
Touchscreen

FP10B5XXX series
WITH BEZEL

Omni Vision Inc.
Drawing # 94-605
Rev A 9-23-02